DO NOT SCALE	IF IN DOUBT PLEASE ASK	ENGINEERING STANDARDS ARE REFERENCED AS 5-3-05-05- SERIES,IF IN DOUBT, PLEASE REQUEST LATEST ISSUE.	PROJECT No:	TEST SPEC No:	ALPHA ISSUES RECORD PRE-PRODUCTION CHANGES
			PERFORMANCE GRAPH No: G11924		

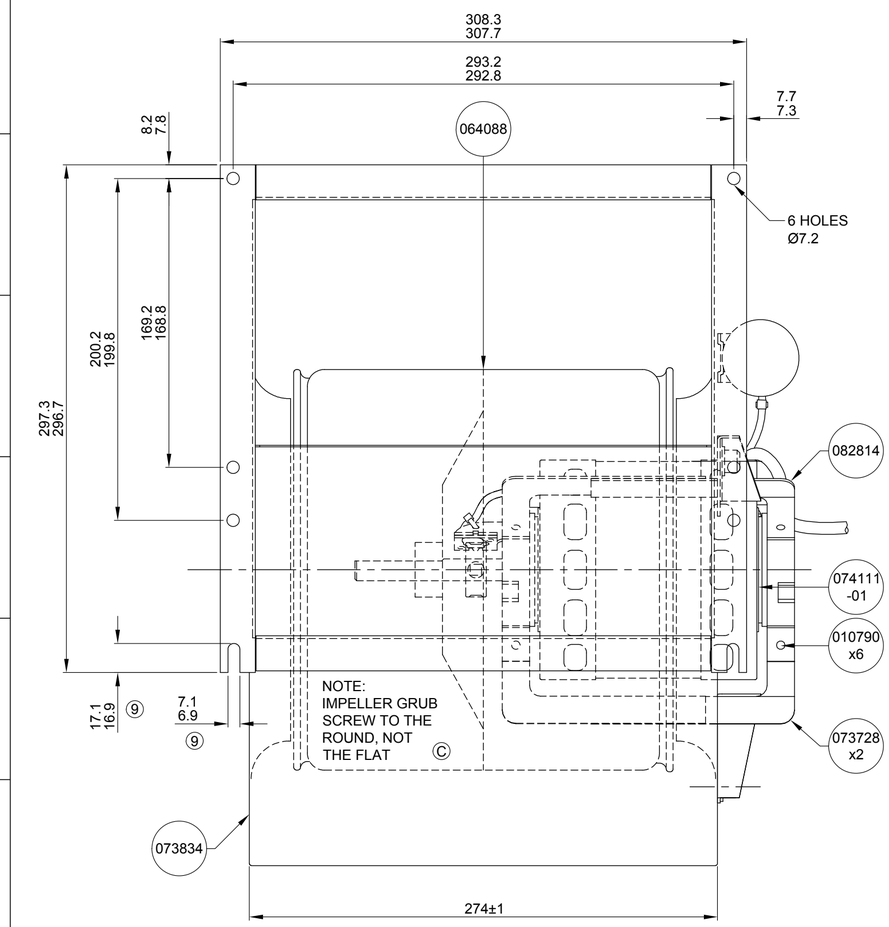

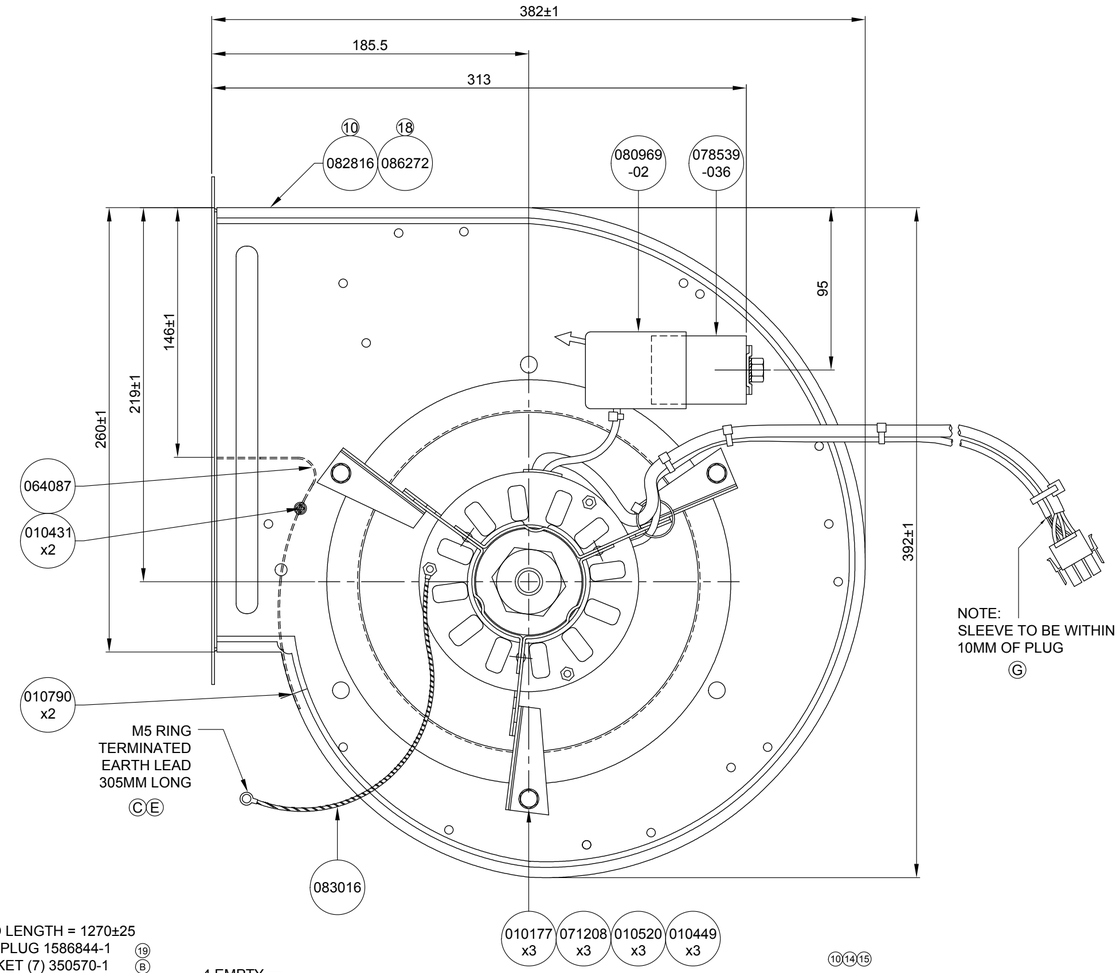

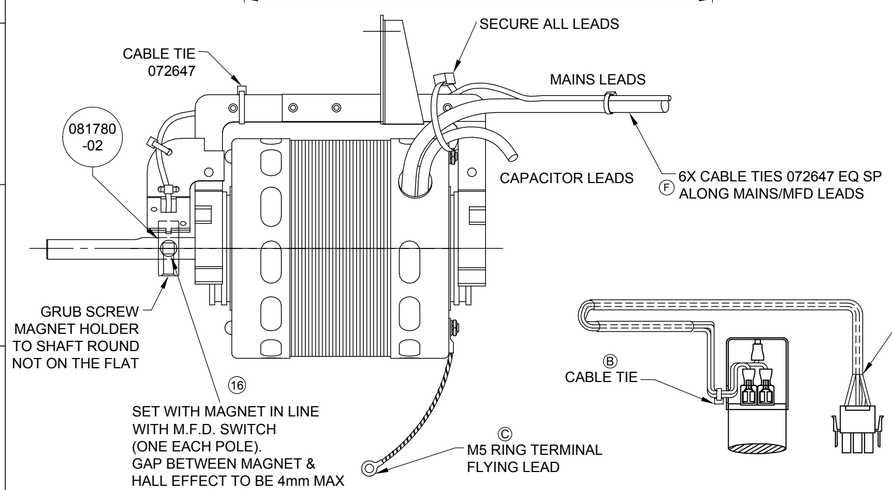

LEAD LENGTH = 1270±25
AMP PLUG 1586844-1
SOCKET (7) 350570-1

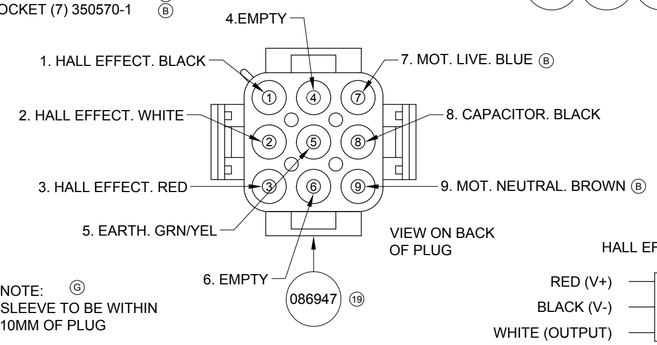

NOTE:
SLEEVE TO BE WITHIN
10MM OF PLUG

CONNECT LEADS AS SHOWN.THE
SEALED CAPACITOR LEAD END SHOULD BE
STORED WITHIN THE CAPACITOR CAP.

DDN913-824
PART No. 076192-03
W.O. No.
SERIAL No.
WWYY532373

PRODUCT LABEL DETAIL

NOTE: BARCODE FORMAT TO BE CODE 128

This product is placed on the market in accordance with Directive 2009/125/EC
EU 327/2011 - Article 1, Clause 3 (d)
and should be used only as a direct replacement for products bearing the same model reference.

ERP SPARES LABEL DETAIL

HALL EFFECT DETAILS

RED (V+)
BLACK (V-)
WHITE (OUTPUT)

SUPPLY VOLTAGE: 12 TO 24Vdc
SUPPLY CURRENT: 18mA MAXIMUM
OUTPUT: 1 POSITIVE PULSE PER REVOLUTION, OPEN-COLLECTOR WITH 56R SERIES RESISTANCE, 25mA MAXIMUM SINK CURRENT.

NOTE: LEADS WILL BE COILED AND SECURED TO MOTOR OR BRACKET WITH CABLE TIE 072647 FOR TRANSIT. SEE WORK INSTRUCTION FOR DETAILS.

ISS.	MODIFICATION	DATE	C/N NO.
19	AMP PLUG 086947 (1586844-1) WAS AMP PLUG 1-4807060 OR 124811-1	19/08/15	19558
18	ERP SPARES LABEL ADDED.	29/04/15	19518
17	HALL EFFECT DEVICE CHANGED TO SURFACE MOUNT.	04/04/11	18333
16	NOTE ADDED: GAP BETWEEN MAGNET AND HALL EFFECT DEVICE TO BE 4mm.	16/04/09	17729
15	LABEL LAYOUT MODIFIED	30/03/09	17692
14	BARCODE ADDED TO LABEL	03/01/08	17352
13	BOM CHANGES ONLY PACKING CHANGED	28/06/07	17264
12	NOTE ADDED	01/12/06	17094
11	PACKING CHANGED	03/08/05	16587
10	NAMES REMOVED FROM LABEL	30/06/04	16459
9	SLOTS ADDED TO OFH'S	09/06/04	16411
8	CHANGE TO GALV MATERIAL	28/03/03	16158
G	D.ANDERSON	11/02/02	15933
F	J.MEAKINS	10/05/02	15540
E	J.MEAKINS	21/01/00	15470
D	J.MEAKINS	10/01/00	15461
C	J.MEAKINS	07/01/00	15438
B	J.MEAKINS	14/10/99	
A	J.MEAKINS	27/08/99	15398

MATERIAL: GALV

FINISH: NATURAL

FIRST USED ON

SIMILAR TO

DIRECTORY PATH: \ASY\DDN\913-824\076192-03

TITLE: DDN913-824 240V 50Hz

DRAWING NO. 076192-03

Torin Limited
torin-sifan
The Partner of Choice
Drakes Way
Swindon Wiltshire
SN3 3JB
Tel : (01793) 524291

THIS DRAWING AND SPECIFICATIONS IS THE EXCLUSIVE PROPERTY OF TORIN LIMITED, ISSUED IN STRICT CONFIDENCE AND SHALL NOT BE REPRODUCED, COPIED OR USED FOR ANY REASON OTHER THAN WHICH IT IS ISSUED, WITHOUT THE WRITTEN PERMISSION OF TORIN LIMITED.

© TORIN LIMITED

PRODUCT TYPE: SMALL BLOWER

TECH 1: AC ■ EC □

TECH 2: AC ■ BD □ CP □ DC □ ECI □ ECR □

ERP DIRECTIVE: N | Ng/EN ARTICLE: A21

PROJECTION

DRAWING GENERALLY CONFORMS TO BS 8888

ALL BS TO LATEST ISSUE

DR. DA	CHKD	AP.	A2
DATE 28/03/03	DATE	DATE	

DIMENSIONS IN MILLIMETRES

SCALE: N.T.S. (UNLESS OTHERWISE STATED)

DRAWING NO. 076192-03

EP24/4-A2